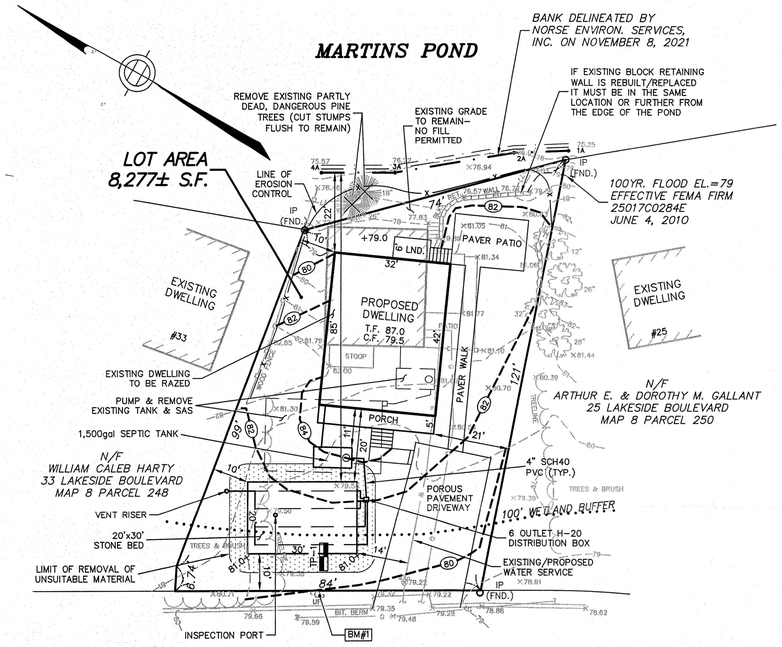

PLAN

GRAPHIC SCALE

20 0 10 20 40 80

(IN FEET)
1 inch = 20 ft.

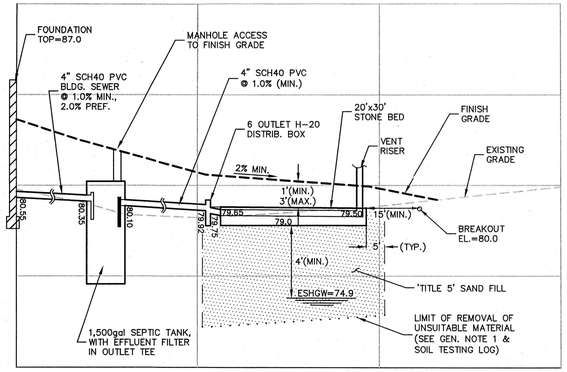

SYSTEM PROFILE

NOT TO SCALE

SCHEDULE OF INVERTS	PROPOSED
INVERT @ FOUNDATION	EL.=80.55
SEPTIC TANK INVERT (IN)	EL.=80.35
SEPTIC TANK INVERT (OUT)	EL.=80.10
DISTRIBUTION BOX INVERT (IN)	EL.=79.92
DISTRIBUTION BOX INVERT (OUT)	EL.=79.75
LATERALS INVERT (START)	EL.=79.65
LATERALS INVERT (END)	EL.=79.50
BOTTOM OF STONE	EL.=79.0
BREAKOUT ELEV.	EL.=80.0
ESTIMATED SEASONAL HIGH G.W.	EL.=74.9

VARIANCES:

1. REQUEST VARIANCE TO ALLOW FOR A PARTICLE SIZE (SIEVE) ANALYSIS TO BE PERFORMED BECAUSE A PERCOLATION TEST IN ACCORDANCE WITH 310 CMR 15.104 AND 15.105 COULD NOT BE PERFORMED PER 310 CMR 15.405 (1) (i).
2. REQUEST VARIANCE TO REDUCE AREA OF STONE FIELD/BED FROM 800sf MIN. REQUIRED BY LOCAL REGULATION TO 600sf.

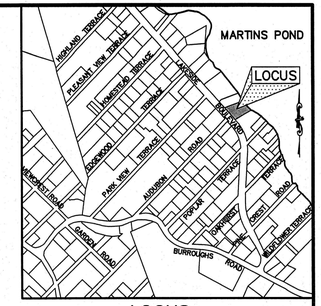

LOCUS

NOT TO SCALE

WETLAND RESOURCE AREA TABLE (100 FOOT BUFFER ZONE)	
TOTAL BUFFER AREA	IMPERVIOUS AREA (MAXIMUM = 22%)
6,927± SF.	1,099 SF. = 15.9% (EXISTING)
	1,504 SF. = 21.7% (PROPOSED)*

NOTES: 1. ALL PROPOSED WORK IS WITHIN EXISTING ALTERED BUFFER ZONE AREAS. THERE IS NO NEW BUFFER ZONE ALTERATION PROPOSED.

*2. DRIVEWAY SURFACE PROPOSED TO BE CONSTRUCTED OF POROUS PAVEMENT.

GENERAL NOTES

1. ALL ORGANIC MATERIAL MUST BE REMOVED FROM THE AREA DIRECTLY UNDER AND BEYOND THE PROPOSED SOIL ABSORPTION SYSTEM. THIS AREA MUST BE BACKFILLED TO ELEVATIONS INDICATED ON THESE PLANS WITH SELECT ON–SITE OR IMPORTED SOIL MATERIAL, CONSISTING OF CLEAN GRANULAR SAND OR OTHER GRANULAR MATERIAL, FREE FROM ORGANIC MATTER AND OTHER DELETERIOUS SUBSTANCES. MIXTURES AND LAYERS SHALL NOT BE USED. THE FILL MATERIAL SHALL MEET THE SPECIFICATIONS OF TITLE 5, SECTION 15.255 (3).
2. HEAVY MACHINERY SHALL NOT BE PERMITTED TO PASS OVER THE SOIL ABSORPTION SYSTEM.
3. TIGHT JOINT PIPING IS TO CONSIST OF POLYVINYL CHLORIDE PIPE (P.V.C.) SCHEDULE 40, UNLESS OTHERWISE NOTED.
4. SEPTIC TANK INLET AND OUTLET TEES SHALL BE AS SPECIFIED IN TITLE 5, SECTION 15.227.
5. ALL DISTURBED AREAS ARE TO BE LOAMED, SEEDED AND MAINTAINED TO PREVENT EROSION.
6. THE GENERAL CONTRACTOR IS TO BE RESPONSIBLE FOR ALL HORIZONTAL AND VERTICAL CONTROL OF ALL COMPONENTS.
7. THE DESIGNER HAS NOT BEEN RETAINED BY THE CLIENT TO CONSTRUCT OR SUPERVISE THE CONSTRUCTION OF THE SYSTEM. THE CONTRACTOR IS RESPONSIBLE FOR MAKING ARRANGEMENTS FOR INSPECTION OF INSTALLATION OF THE SYSTEM WITH THE LOCAL BOARD OF HEALTH BEFORE BACKFILLING OVER ANY SYSTEM COMPONENTS.
8. THE DESIGNER MUST INSPECT AND SURVEY THE INSTALLED SYSTEM PRIOR TO THE CONTRACTOR BACKFILLING OVER ANY SYSTEM COMPONENTS. THE AS–BUILT PLAN MUST BE CERTIFIED BY THE DESIGNER WITH A STAMP AND SIGNATURE.
9. PLAN HAS BEEN PREPARED SPECIFICALLY AS A SEPTIC SYSTEM DESIGN PLAN AND IS NOT TO BE USED TO ESTABLISH PROPERTY LINES OR BUILDING SETBACKS. NO REPRESENTATION OR CERTIFICATION AS TO THE ACCURACY OF THOSE SHOWN IS IMPLIED OR INTENDED.
10. SEE BENCHMARK TABLE ON THIS DRAWING FOR ELEVATION DATUM.
11. EXISTING UTILITY LOCATIONS HAVE NOT BEEN VERIFIED. PRIOR TO THE START OF EXCAVATION ACTIVITIES THE CONTRACTOR IS TO CALL DIG–SAFE AT 1–888–344–7233.
12. NO CHANGES ARE TO BE MADE TO THE PLAN DURING CONSTRUCTION UNLESS APPROVED BY THE DESIGN ENGINEER AND BOARD OF HEALTH.
13. THE SYSTEM HAS NOT BEEN DESIGNED TO ACCOMMODATE A GARBAGE DISPOSAL.
14. THERE ARE NO PRIVATE DRINKING WATER WELLS WITHIN 100FT. OF THE PROPOSED SOIL ABSORPTION SYSTEM.
15. THE PROPOSED WORK WILL BE WITHIN THE 100' BUFFER ZONE OF A WETLAND RESOURCE AREA AND WILL REQUIRE A FILING OF A NOTICE OF INTENT WITH THE LOCAL CONSERVATION COMMISSION AND THE MASSACHUSETTS DEPARTMENT OF ENVIRONMENTAL PROTECTION UNDER THE WETLANDS PROTECTION ACT. THE CONTRACTOR SHALL OBTAIN A COPY OF THE ORDER OF CONDITIONS AND FAMILIARIZE HIMSELF WITH ALL REQUIREMENTS CONTAINED THEREIN.
16. ALL SYSTEM COMPONENTS SHALL BE MARKED WITH MAGNETIC TAPE OR A COMPARABLE MEANS IN ORDER TO LOCATE THEM ONCE BURIED, PER TITLE 5, SECTION 15.221(12).

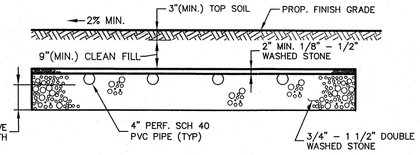

SECTION A–A

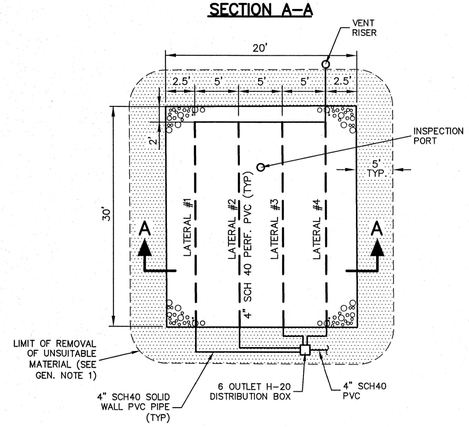

PLAN

DETAIL OF SOIL ABSORPTION SYSTEM

NOT TO SCALE

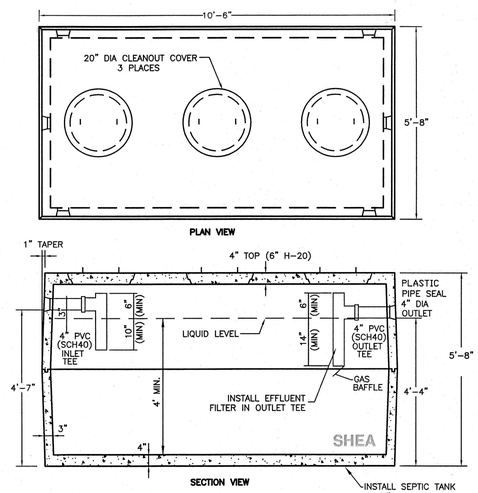

NOTES:
1. SEPTIC TANK SHALL BE 4,000psi MIN. AFTER 28 DAYS.
2. CONSTRUCTION OF SEPTIC TANK SHALL CONFORM WITH DEP TITLE 5, 310 CMR, 15.226 AND SHALL BE WATER–TIGHT.
3. OUTLET TEE SHALL BE EQUIPPED WITH A GAS BAFFLE.
4. PLACE 6" OF STONE UNDER TANK AND DISTRIBUTION BOX.
5. REMOVE TOPSOIL AND SUBSOIL AND REPLACE WITH COMPACTED GRAVEL IN FILL CONDITION.
6. TEES TO BE LOCATED DIRECTLY BELOW CLEANOUT COVERS.

1500 GALLON SEPTIC TANK

NOT TO SCALE

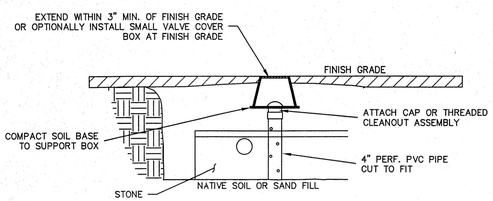

INSPECTION PORT

NOT TO SCALE

BENCHMARKS (ASSUMED DATUM)		
NO.	DESCRIPTION	ELEVATION
BM#1	NAIL IN UTILITY POLE	80.48

LEGEND

- EXISTING UTILITY POLE
- EXISTING STONE WALL
- EXISTING TREES
- EXISTING CONTOUR
- PROPOSED CONTOUR
- ×99.66 EXISTING SPOT GRADE
- + 99.6 PROPOSED FINISH GRADE
- TP–1 SOIL TESTING LOCATION
- EXISTING TREE/BRUSH LINE
- W EXISTING WATER SERVICE
- X PROPOSED EROSION CONTROL
- BM#1 BENCH MARK (SEE CHART)

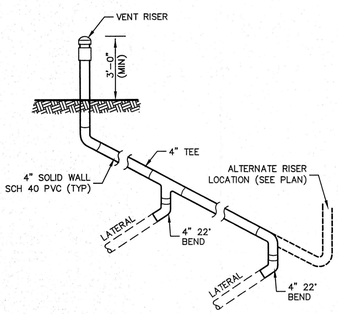

VENT SYSTEM

NOT TO SCALE

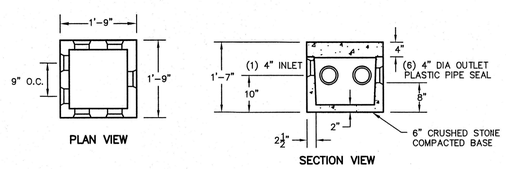

6 OUTLET H–20 DISTRIBUTION BOX

NOT TO SCALE

**PERC TEST UNABLE TO BE PERFORMED DUE TO DEPTH & PROXIMITY TO GROUNDWATER. SOIL SAMPLE TAKEN PER ALTERNATIVE TO PERCOLATION TESTING GUIDANCE FOR SYSTEM UPGRADES. SOIL DETERMINED IN FIELD TO BE UNCOMPACTED. THE PARTICLE SIZE ANALYSIS RESULTS SHOW CLASS I – SAND (92.2% SAND, 3.8% SILT, 4.0% CLAY), WHICH REQUIRES EFFLUENT LOADING RATE OF 0.66 gdp/sf.

SOIL TESTING

PERFORMED BY: LUKE J. ROY, SOIL EVALUATOR – SE 2740
FIELD BOOK 143 PAGE 121
DATE: NOVEMBER 4, 2021

TP–1

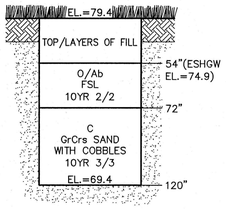

REFUSAL	–
ESTIMATED HIGH GROUND WATER	@ 54"(74.9)
WATER SEEPING	@ 60"
STANDING WATER	@ 91"
PERC RATE	**

DESIGN

EXISTING 3 BEDROOM SEPTIC SYSTEM PER HEALTH FILE, DESIGN FOR NEW 3 BEDROOM DWELLING

3 BEDROOMS @ 110 gpd PER BEDROOM = 330 gpd
CLASS I SOIL – LTAR=0.66 gpd/sf**

REQUIRED AREA: (330 gpd) / (0.66 gpd/sf) = 500 sf

USE 20' x 30' STONE BED
AREA PROVIDED: 20' x 30' = 600 sf
FLOW PROVIDED: 600 sf x 0.66 gpd/sf = 396 gpd

200% x 330 gpd = 660 gal.
USE (MIN. TITLE V) 1500 gal. SEPTIC TANK

NOTE: SYSTEM HAS NOT BEEN DESIGNED TO ACCOMMODATE GARBAGE DISPOSAL.

–NOTICE–

THIS DRAWING AND ALL ENGINEERING INFORMATION CONTAINED HEREIN IS AUTHORIZED FOR USE ONLY BY THE PARTY FOR WHOM THE WORK WAS CONTRACTED OR TO WHOM IT IS CERTIFIED. IF YOU ARE NOT SUCH A PARTY, YOU ARE HEREBY NOTIFIED THAT ANY USE, DISCLOSURE, COPYING, DISTRIBUTION OR THE TAKING OF ANY ACTION IN RELIANCE ON THIS OR ANY RELATED INFORMATION, PLAN OR REPORT IS STRICTLY PROHIBITED WITHOUT OUR EXPRESSED WRITTEN CONSENT IN ALL INSTANCES.

COMMONWEALTH OF MASSACHUSETTS
LUKE J. ROY
CIVIL
No. 47356
REGISTERED PROFESSIONAL ENGINEER
2/18/22

LJR ENGINEERING, INC.
Civil Engineers & Land Surveyors
234 Park Street • North Reading, MA 01864 • 978-664-8141

SUBSURFACE SEPTIC DISPOSAL SYSTEM REPLACEMENT

27 LAKESIDE BOULEVARD
NORTH READING, MASSACHUSETTS
ASSESSORS MAP 8 PARCEL 249

APPLICANT: SMITH SONS PLUMBING & HEATING
230 ELM STREET
NORTH READING, MA 01864

DATE: FEB. 2, 2022	DESIGNED BY: L.J.R.
	DRAWN BY: R.P.O.
SCALE: AS NOTED	CHECKED BY: L.J.R.
	PROJECT No: 21–134
SHEET: 1 OF 1	DRAWING: 21134SEP.DWG